CLICK for More Info Online

CHRIS ALSTON'S Chassisworks
THE HOME OF HIGHER TECHNOLOGY

g-Machine Double A-Arm Suspension, Rack-and-Pinion Steering, Crossmember System

Base weld-in preassembled crossmember (78W943, *above*) must be combined with a suspension and steering package (780943, 780953, 780963) to form a complete system.

Clean-Sheet Design, Not Mustang II or Revised OEM Geometry

Chassisworks' g-Machine front end is a truly versatile high-performance suspension solution, suitable for g-Machines, street rods, muscle cars, or any project in need of optimized handling. State-of-the-art engineering workstations with Pro/ENGINEER software—combined with our advanced, automated factory—enabled Chassisworks' engineers to create a current-technology, competitively priced, handling performance front suspension system. Chassisworks' new g-Machine design, developed with the aid of finite element analysis (FEA) software, is far superior in performance, reliability, and ease of installation than components made to directly replace 40-year-old '60s muscle-car geometry and variants of the 30-year-old Mustang II suspension. Although late-model-Corvette–based systems offer similar performance, your choice of wheels is extremely limited to flat-face, high-negative-offset wheels. The complete suspension and steering system is factory-welded directly to the bent-tube billet-component crossmember, ensuring perfect geometry and eliminating the need to weld multiple pieces or make complicated measurements while installing the system.

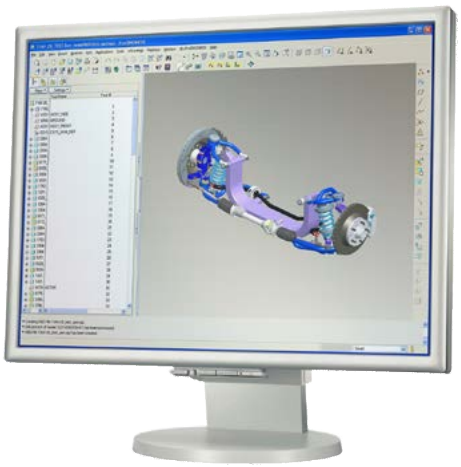

The Chassisworks' Design Is Superior in These Key Areas:

- By making our own billet rack-and-pinion assembly, we are able to offer perfect front-suspension geometry at 15 different hub-to-hub widths.
- Rack and pinion is placed forward of the axle centerline (front steer) for better oil-pan clearance and rotates to eliminate sharp universal-joint angles and improve exhaust clearance.
- Virtually no bumpsteer in 6" of suspension travel enables predictable handling regardless of the vehicle's changing pitch or roll state.
- Broad lower control arm increases load capacity and stability during braking and cornering.
- Longer lower control arm length reduces track-width change and roll-center movement during suspension travel for smoother transitions entering and exiting turns.
- The lower shock mount is located very close to the balljoint for a better shock-motion ratio. A higher shock-motion ratio allows use of lighter, lower-rate springs for better suspension control without degrading ride quality.
- Our g-Machine spindles are taller than OEM spindles and therefore increase camber gain during body roll, keeping tires in better contact with road surface.
- Two-inch-dropped spindle lowers ride height and center of gravity to improve overall handling.
- Short/long arm (SLA) suspension layout is a compact, low-profile suspension design that leaves plenty of room around the engine.
- Traditional hub-style spindle accepts up to 14" brakes and allows more wheel choices compared to Corvette-style spindles.

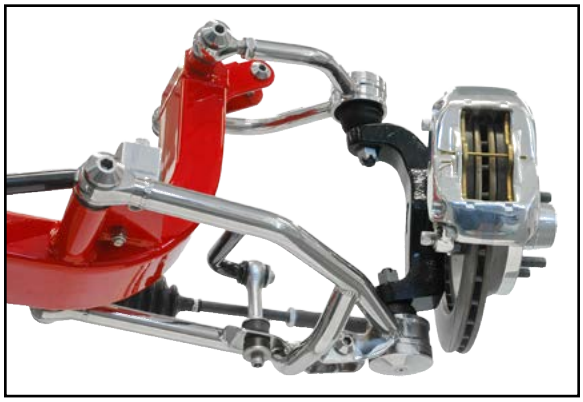

Suspension and Steering Components

A broad range of suspension and steering components enables the system to be custom-outfit to match your performance requirements. Options include manual or power rack-and-pinion assembly, Street- or g-Machine control arms and anti-roll bar, fabricated or sculpted spindles, and 11-3/4″ rotor for street brakes or 13″ or 14″ rotor for high-performance brakes. Bolt-on installation, perfect geometry, and tailored performance make the g-Machine system an excellent choice for your next project.

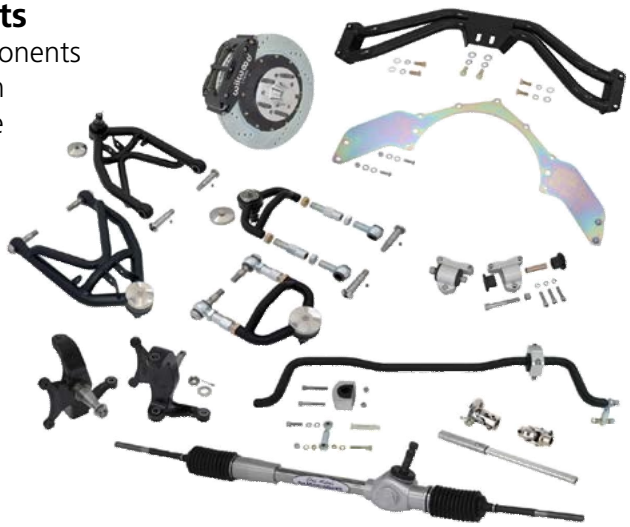

Made in 15 Different Widths, 24 to 38 Inches, in 1-Inch Increments

The single largest problem with any front suspension conversion is getting the correct hub-to-hub width to match the vehicle's tire clearance requirements. By design, the g-Machine crossmember hub width can be sized from 51 to 65 inches, in 1-inch increments, without affecting wheel rates, ride quality, steering effort, or turning radius. This enables use with vehicles ranging from compacts to full-size pickups. To accomplish this we manufacture the rack and pinion, 4 x 2″ suspension crossmember, and anti-roll bars in 15 different widths. We are the only builder that can do this because we actually manufacture our own rack and pinions. The same A-arm and spindle components are used with different-width crossmembers to provide a track width that best suits your project's performance or design needs, such as wider for enhanced handling or narrower to fit deep-dish wheels. The g-Machine system greatly increases an installation shop's potential customer base by familiarizing their staff with one system that is applicable to many vehicles.

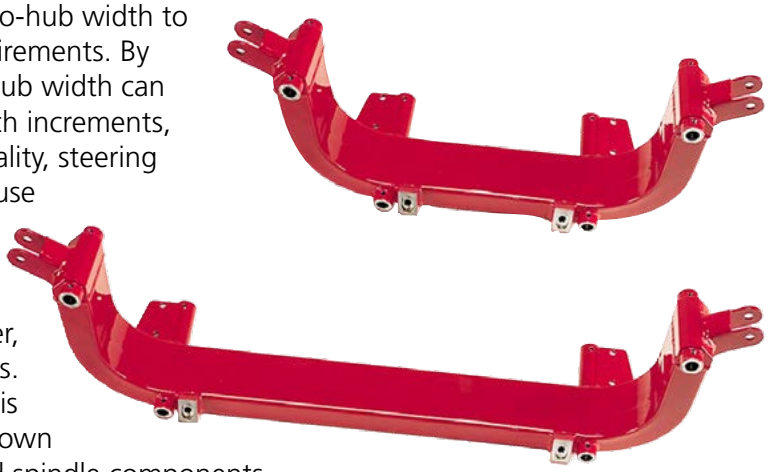

Single-Piece 4 x 2 x .120″ g-Machine Crossmember

Bent-tube, billet-component cross-members are a completely closed rigid structure with greater strength and resistance to bending and twisting than other designs. Formed from a single piece of 4 x 2 x .120″ steel tubing, large-radius mandrel bends are placed at each end to distribute loads throughout the crossmember, eliminating fatigue points at critical areas. Slots for the billet-mount tabs are machined in a large horizontal machining center with dedicated fixturing to guarantee correct component geometry, ensuring the suspension moves as designed.

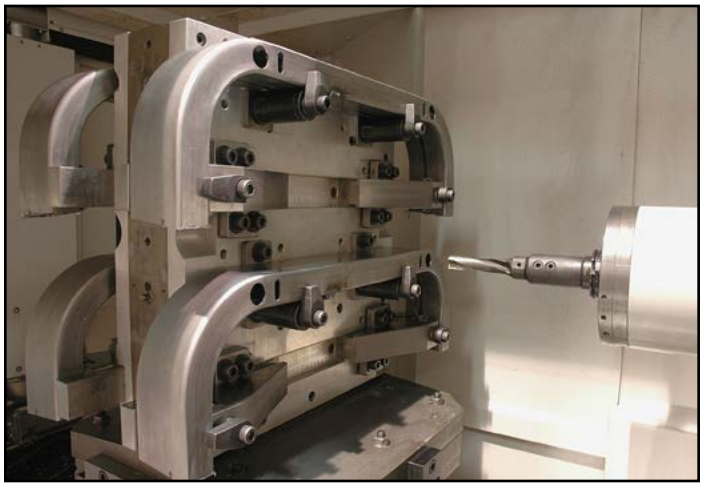

Crossmembers in large horizontal machining-center fixture.

Interlocking-Slot-Tab Technology

Self-fixturing female slots used with machined male tabs provide an interlocking assembly method that enables A-arm, rack and pinion, and shock mounts to be accurately positioned in all axes. This guarantees the suspension will perform as designed. Non-interlocking designs are not nearly as accurate after welding. Superior spray-arc welding process produces the best weld penetration with excellent appearance.

Billet rack-and-pinion mount inserts into machined slot on crossmember.

Billet Steel A-Arm Mounts with Pivot Pins

Billet steel, CNC machining allows us to create A-arm mounts with specific areas of increased thickness for added strength not possible with other designs. Unlike slot- or eccentric-mounted A-arms, Chassisworks' exclusive fixed-axis pivot-pin design eliminates the possibility of shifting pivot shafts, provides greater shear strength, and increases bending resistance. Threaded bosses at each end of the mount enable use of set screws to lock A-arm pivot pins into position. Using slot-tab technology, billet upper A-arm mounts snap and weld into place providing anti-dive geometry and capping the open ends of the 4 x 2″ crossmember to better distribute forces, decrease flex throughout the structure, and provide a solid location for the upper shock mount. The lower A-arm mount is a single-piece component passing directly through the crossmember and supported by the anti-roll-bar mounting plate to distribute bending forces throughout the crossmember. This increases rigidity and geometric accuracy of the control arm for more predictable handling.

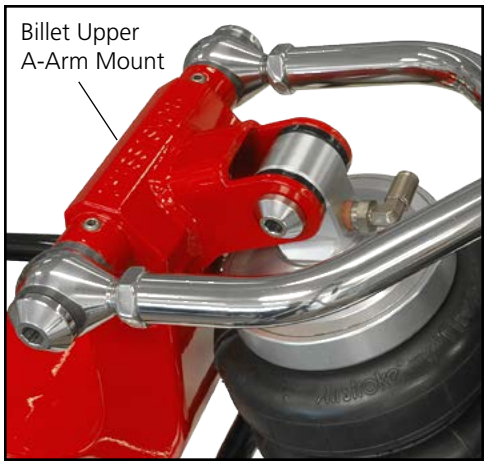

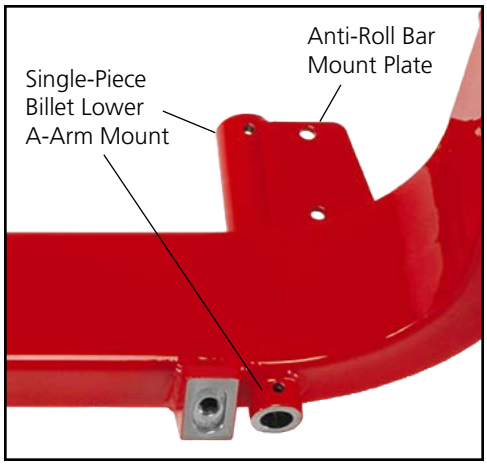

One-Piece Clevis Shock Mount

Our g-Machine upper shock mount has a 1-5/16″-wide, formed clevis that accepts 1/2″ mounting hardware and provides adequate clearance for use with VariShock coil-overs or ShockWave™ air suspension. Our one-piece design—with an integrated gusset across the top and sides—bridges the billet upper A-arm mount to the 4 x 2″ crossmember. This provides a larger, more stable mount base, with better appearance than welded designs, and eliminates bending fatigue possible with common sheet metal- or tubing-mounted designs of other manufacturers.

Billet Rack Mounts and Clamps

Billet steel rack mounts using dual slot-tab technology form an interlocking bridge between the 4 x 2″ crossmember and billet aluminum rack brackets. The angled mount fixture welds to the 4 x 2″ crossmember, attaching to the rack body at the widest points. This allows positioning of the rack above the bottom of the crossmember, safe from road hazards. Billet aluminum rack clamps attach into interlocking grooves in the rack gearbox, preventing flex in hard cornering unlike rubber-mounted designs. This also allows rotation of the input shaft to aid steering-shaft installation around engine obstacles and the exhaust system.

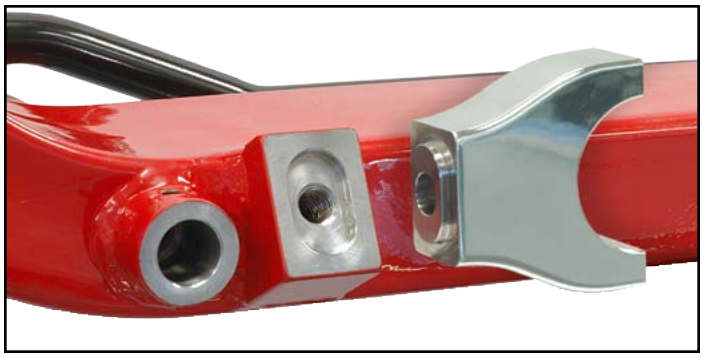

Slot-Tab Technology, Interlocking Joint

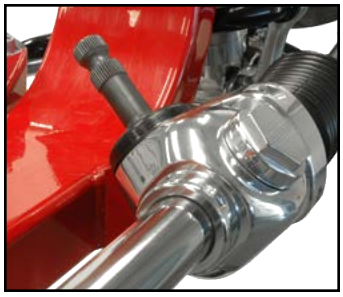

Pinion Rotated **Up**

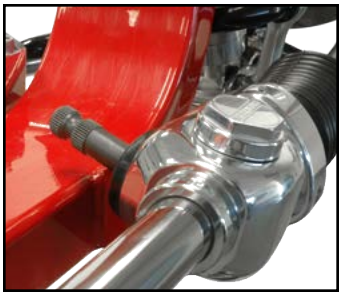

Pinion Rotated **Down**

Four Installation Methods

Chassisworks' g-Machine crossmember measures 4-1/2″ from the ground with a 12″-rolling-radius tire, allowing a low ride height with enough clearance for street driving. The rear of the g-Machine crossmember is 1-3/4″ behind the front axle centerline providing more oil-pan clearance than most stock frames. Optional 4 x 2″ front frame rails are available in 4-1/2″ or 6″ ground clearance at the firewall to allow additional clearance if needed. Optional frame horns attach to the front of the crossmember. Crossmembers ship with an extremely thorough, 57-page, photo-illustrated manual, making assembly and installation less intimidating and more easily accomplished.

There are four ways to use a Chassisworks g-Machine crossmember in your project.

1. Purchase a complete preassembled system that bolts directly into your car (i.e., Chevy II or Camaro Clip).
2. Weld a g-Machine crossmember directly to your existing frame.
3. Replace your front frame by welding on a g-Machine crossmember and 4 x 2″ frame rails.
4. Build your project on a complete g-Machine full frame with selection of rear suspension system.

Chassisworks manufactures the most complete group of products to complete your project, guaranteeing perfect fit and continuing availability. Refer to individual product datasheets for additional information.

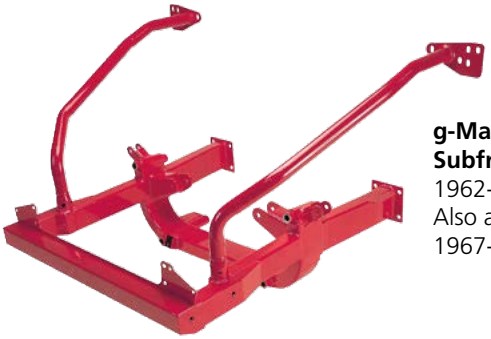

g-Machine Direct-Fit Subframe Systems
1962-67 Chevy II shown.
Also available for
1967-69 Camaro.

Street Machine Crossmember
Weld-in installation with existing vehicle frame required.

g-Machine 4x2 Full Frame
Shown with canted 4-bar rear suspension.
Also available with parallel 4-link or ladder-bar suspensions.

g-Machine 4x2 Front Frame
Shown with 6″ frame clearance rails.
Also available in 4-1/2″ clearance configuration.

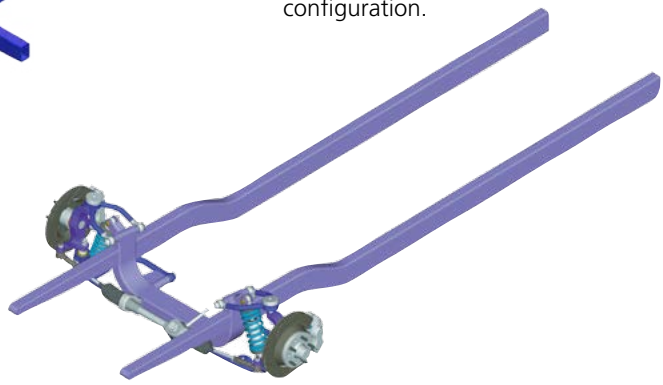

Part Number	Description
78W943	Street Machine A-Arm Crossmember Assembly (specify width)
78X943	4 x 2″, 4-1/2″ Ground Clearance Frame Rail with Street-Machine A-Arm Crossmember (rails unwelded)
7170W	4 x 2″, 4-1/2″ Ground Clearance Frame Rail with Street-Machine A-Arm Crossmember (factory welded)
78Y943	4 x 2″, 6″ Ground Clearance Frame Rail with Street-Machine A-Arm Crossmember (rails unwelded)
7171W	4 x 2″, 6″ Ground Clearance Frame Rail with Street-Machine A-Arm Crossmember (factory welded)
7190	4 x 2″, Tapered Frame Horn, pr.
75XX	4 x 2″ g-Machine Full Frame

Notes:

Notes:

All prices subject to change. Current pricing available at www.cachassisworks.com.

CHRIS ALSTON'S Chassisworks THE HOME OF HIGHER TECHNOLOGY

Chris Alston's Chassisworks, Inc.
8661 Younger Creek Drive
Sacramento, CA 95828

Order: 800-722-2269
Tech: 916-388-0288
Fax: 916-388-0295

sales@cachassisworks.com
www.cachassisworks.com