INSTALLATION GUIDE

CHRIS ALSTON'S Chassisworks
THE HOME OF HIGHER TECHNOLOGY

5706-A30 and 5707-A30

gStreet™ Coil-Over and Air-Spring Shock Conversion for 1971-1972 GM A-Body

Description:
gStreet™ Coil-Over and Air-Spring Shock conversions includes upper and lower control arms, and VariShock coil-over shocks with springs or air-spring shocks. Additional air compressor and control system are required for operation.

PARTS LIST

Qty	Part Number	Description
2	VAS 16XM1-425	VariShock coil-over, ball-stud upper, pivot-ball lower, 4.25” travel (option)
2	VAS 21-09XXX	VariSpring coil spring, 9” length (option)
2	VAS 13XM1-425	Air-spring shock, ball-stud upper, pivot-ball lower, 4.25” travel (option)
1	VAS 508-103	Shock spacers, set of 4
1	5704-A10	g-Street upper control arms, left and right pair
1	5705-A10	g-Street lower control arms, left and right pair

Driver-Side Components Shown Below

Lower **Upper**

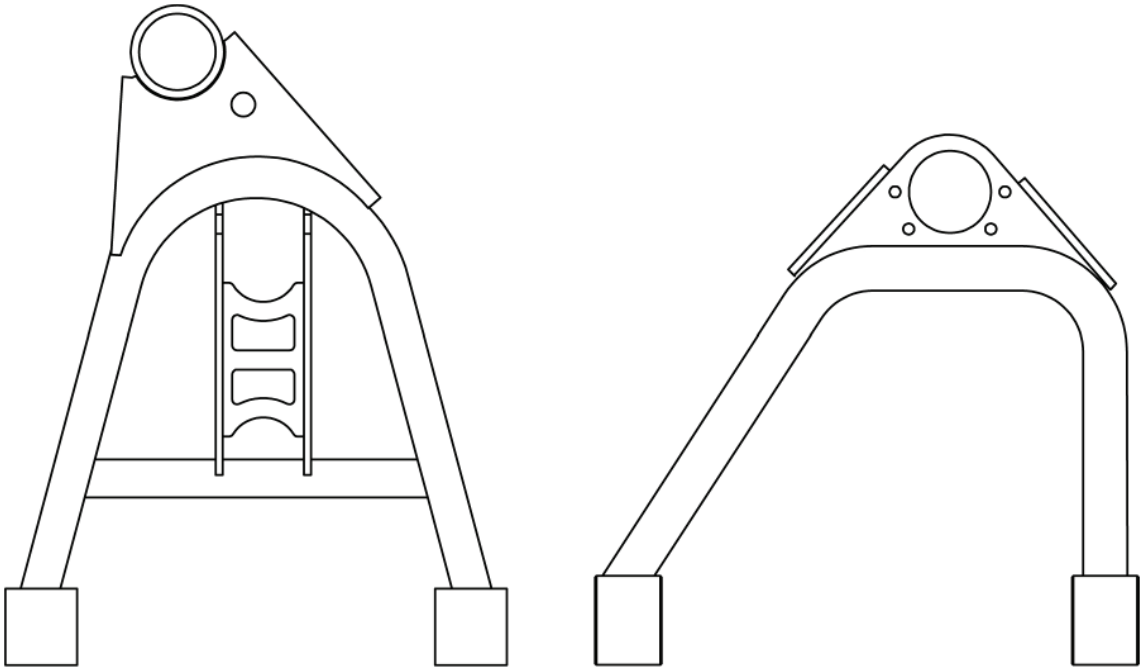

INSTRUCTIONS

DO NOT install the coil springs on the shocks or inflate the air bags until after proper clearance during suspension travel has been verified. Shocks must be adjusted to the softest setting.

Remove Factory Components

1. Raise and support the vehicle at a safe and comfortable working height, so that the front suspension hangs freely.
2. Remove the coil spring, shock absorber, and upper and lower control arms. Refer to a factory service manual for proper disassembly procedure.
3. On some cars, to remove the upper control arm you must remove the bolts that are pressed into the frame. We made this slide hammer adapter (a nut with a piece of angle iron welded to it) to aid in removing the bolts.

Install Lower Arm

4. Refer to the diagram to differentiate the driver side from the passenger side.
5. Bolt the lower arm to the vehicle using the factory hardware.

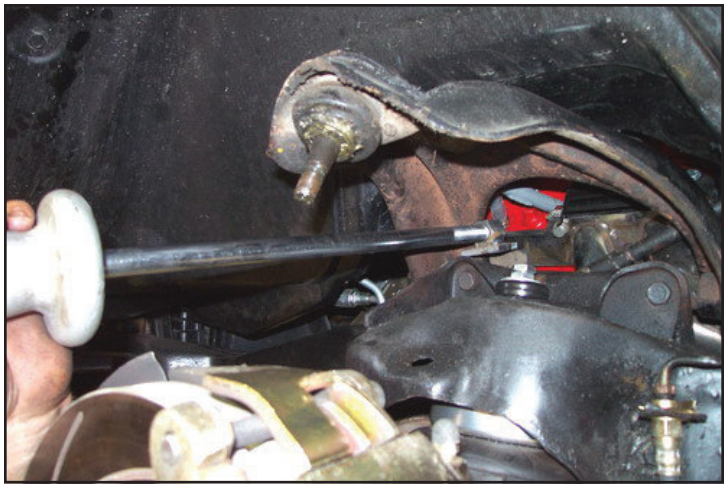

Air-Spring Shock Clearance

Minimum of 3/4" clearance around the air bag to operate safely once inflated.

6. Apply thread sealant to one of the 90-degree air fittings and screw it into the top of the shock.
7. Raise the air-spring into position to determine the exact area of the frame rail that will need to be trimmed.
8. Use a torch or cutting wheel to trim the frame. Allow ample time for the frame to cool and/or grind smooth any sharp edges before test fitting the shock.
9. For clearance purposes, the air bag and upper cap can be twisted to rotate the location of the air fitting. Some shocks have set screws along the bottom end of the bag that must be loosened first.

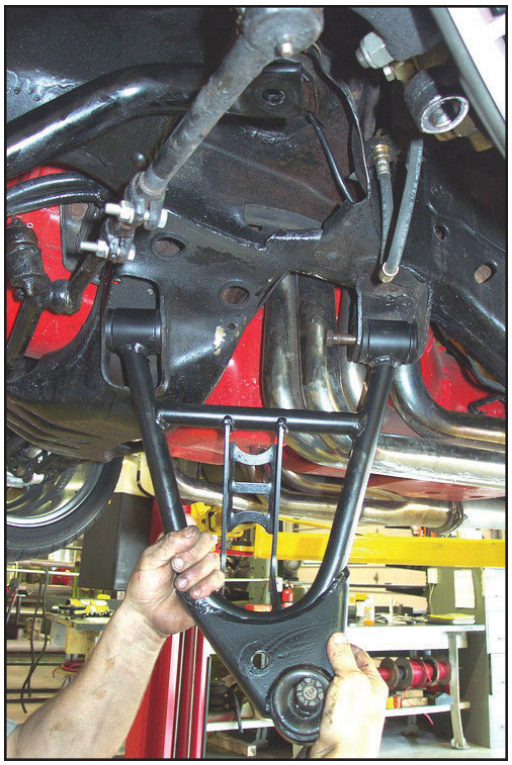

Top Mount Clearance

The material that forms the factory upper spring pocket may require trimming to allow The ball-stud upper shock mount to properly seat.

10. Raise the shock into position to determine the exact area of the spring pocket that will need to be trimmed.
11. Use a torch or cutting wheel to trim the pocket. Allow adequate room for the shock to pivot as it will during normal operation.
12. Grind smooth any sharp edges.

Check Suspension Travel

Clearance around the shock will need to be physically verified throughout the full range of suspension travel.

13. Bolt the shock's top mount onto the vehicle.
14. Swing the lower arm up to the shock and secure using the bolt and locknut along with a spacer on each side of the shock.
15. Move the suspension from full compression to full extension while checking for clearance around the shock and spring.

    NOTE: Some installations will require the anti-roll bar endlinks to be shortened to correctly angle the bar ends.

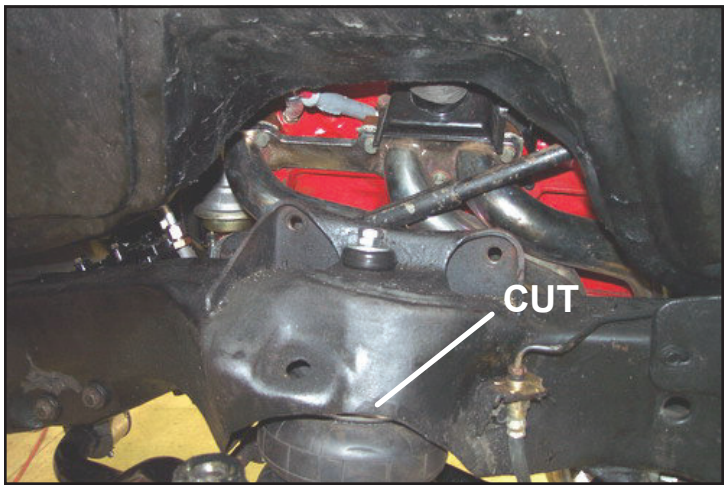

Install Upper Arm

16. Bolt the upper arm to the frame re-using the factory bolts.

    NOTE: The upper balljoint is bolted underneath the arm's mounting plate to provide additional arm travel.

17. Reassemble the spindles and tie rods. Refer to the factory service manual for proper assembly procedures.

18. Grease the upper and lower ball joints.

Air-Spring Pressure

19. Air pressure on this system will be approximately 100-115 psi, but will vary due to vehicle weight differences and driver preference.

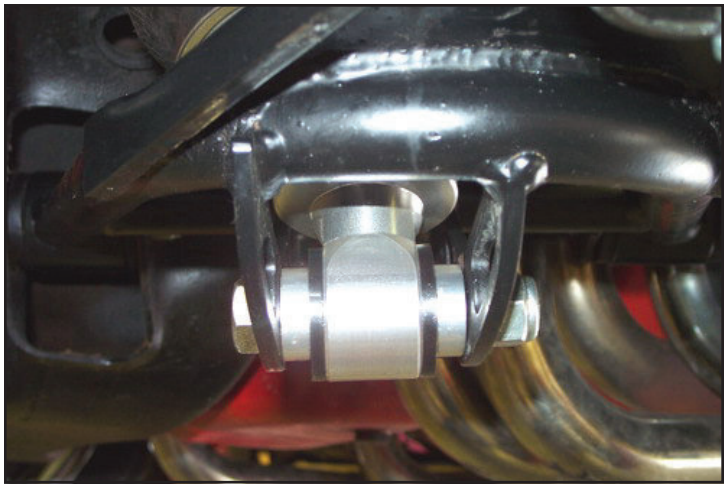

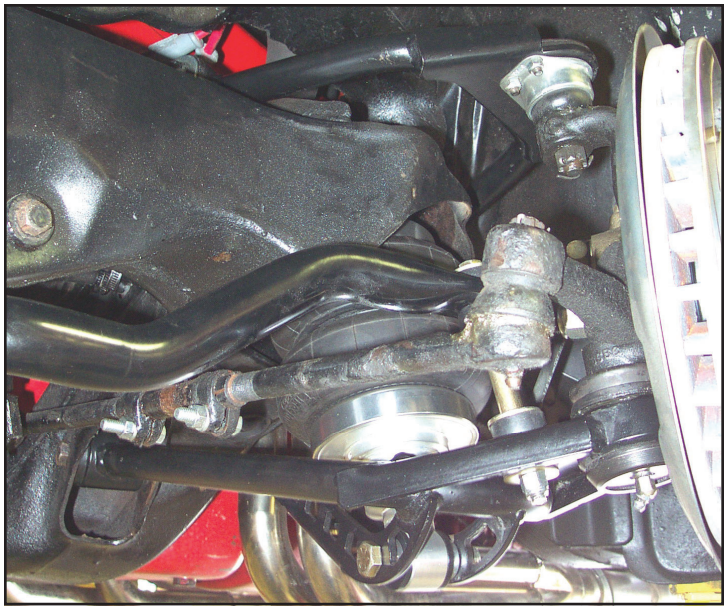

WARRANTY NOTICE:
There are NO WARRANTIES, either expressed or implied. Neither the seller nor manufacturer will be liable for any loss, damage or injury, direct or indirect, arising from the use or inability to determine the appropriate use of any products. Before any attempt at installation, all drawings and/or instruction sheets should be completely reviewed to determine the suitability of the product for its intended use. In this connection, the user assumes all responsibility and risk. We reserve the right to change specification without notice. Further, Chris Alston's Chassisworks, Inc., makes **NO GUARANTEE** in reference to any specific class legality of any component. **ALL PRODUCTS ARE INTENDED FOR RACING AND OFF-ROAD USE AND MAY NOT BE LEGALLY USED ON THE HIGHWAY**. The products offered for sale are true race-car components and, in all cases, require some fabrication skill. **NO PRODUCT OR SERVICE IS DESIGNED OR INTENDED TO PREVENT INJURY OR DEATH**.

Chris Alston's Chassisworks
8661 Younger Creek Drive
Sacramento, CA 95828
Phone: 916-388-0288
Technical Support: sales@cachassisworks.com